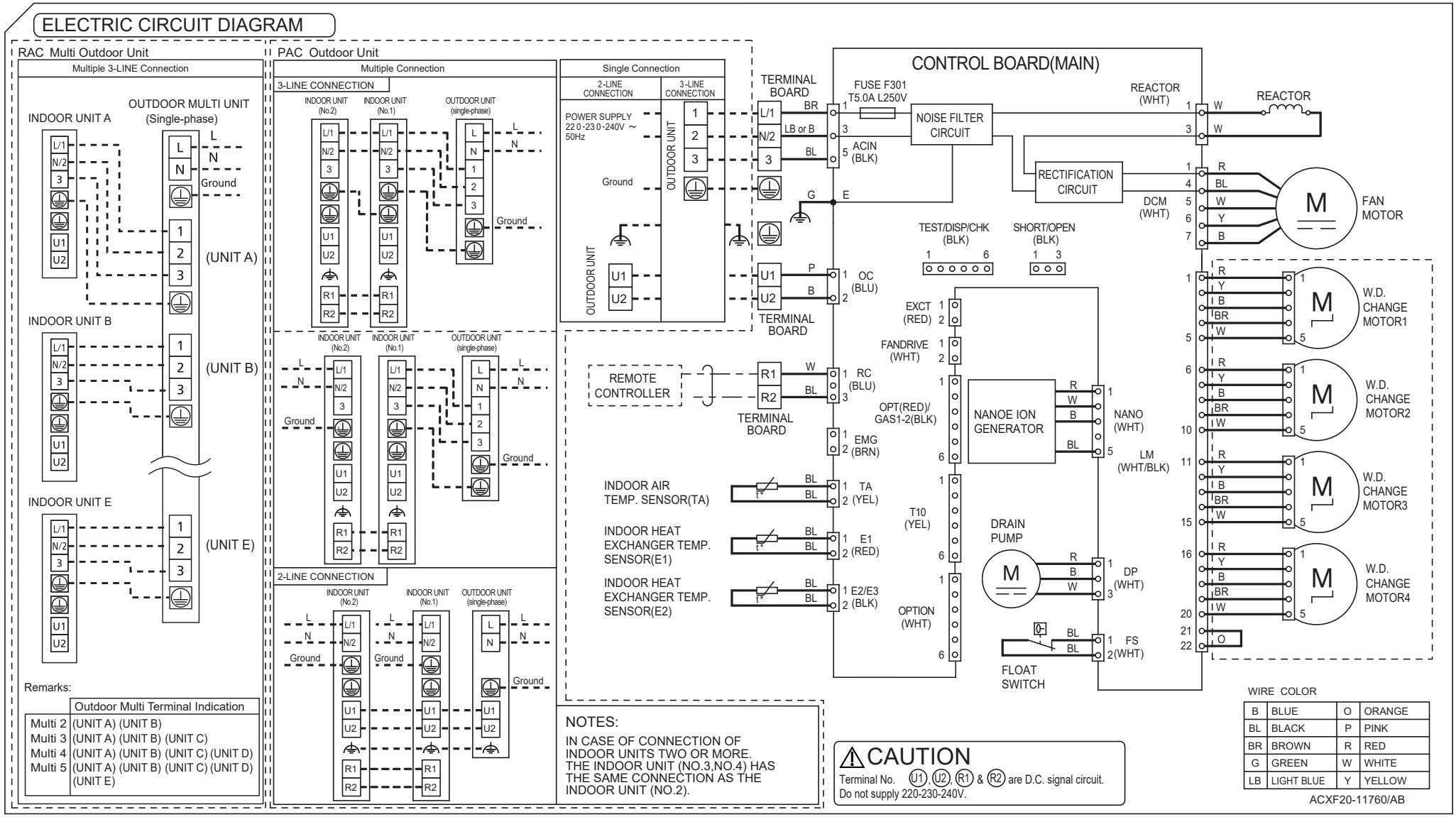# Schaltplan S-25PY3E, S-36PY3E, S-50PY3E, S-60PY3E